CATALOG NO. 8000C WALL RACK

ONLY A SCREWDRIVER IS
NECESSARY FOR COMPLETE ASSEMBLY

PARTS LIST

HARDWARE - (for each bracket assembly)
3 ea. ¼ x 3/8" round head machine screws
1 ea. ¼ x 1" round head screws
1 ea. No. 10-24 x 3/8" round head screw
2 ea. No. 10-2" round head sheet metal screws (for mounting rack to wall.)
2 ea. Black caps for ends of hanger bar

OTHER PARTS in each carton
4 ea. ¾" diameter shelf tubes
1 ea. 1" diameter hanger bar
1 ea. Hook strip with hooks
2 ea. #10 x 2" Round head, sheet metal screws

PARTS - (for each bracket assembly)
1ea. Back strip for mounting
1ea. Shelf support brace with loop for hanger bar
1ea. Shelf support, 1" square tube, with 4 large holes and 2 threaded ¼" holes

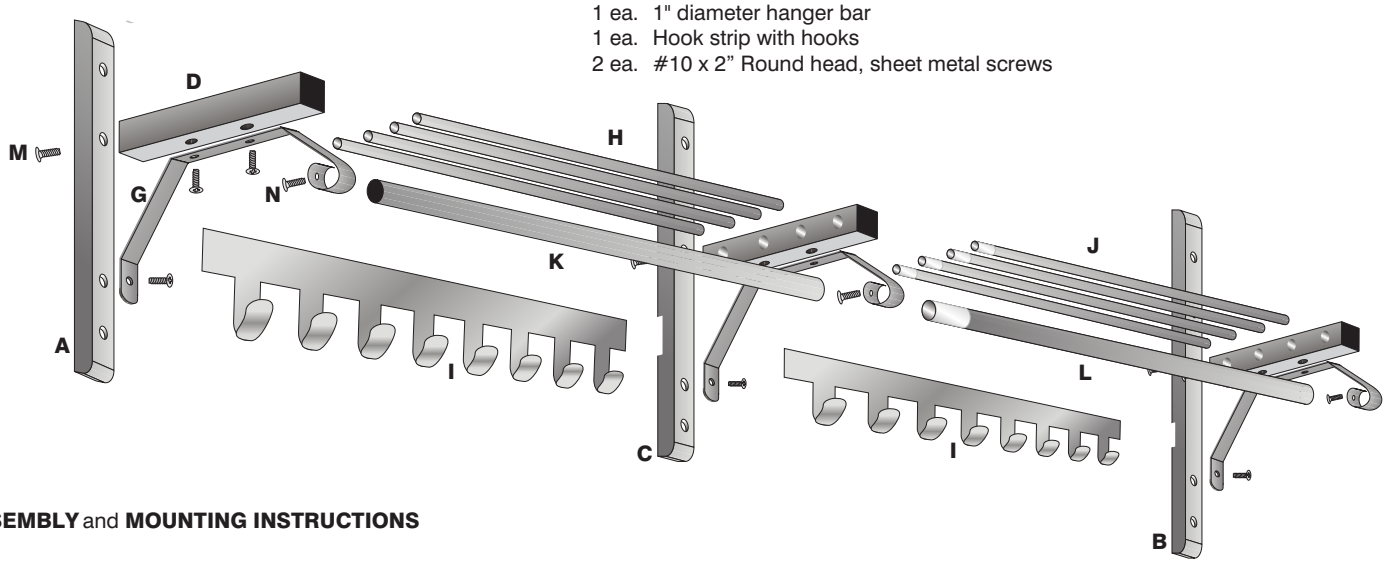

ASSEMBLY and **MOUNTING INSTRUCTIONS**

Step 1 Open each bracket assembly package and arrange parts on a flat surface. Note that the large ¾ " diameter holes in the square shelf support tubes "D" and slot in the back strip "A" face to the right on the left end bracket, and to the left on the right end bracket "B" and go all the way through on center bracket "C".

Step 2 Assemble bracket as per diagram (parts A, D, G) without tightening screws.

Step 3 Securely tighten the 1" round head screw "M" that hold part D to A.

Step 4 Assemble the other bracket (as above).

Step 5 Securely tighten all other screws except the small screw "N" in the loop where the hanger bar will go.

Step 6 Mount the left bracket "A" to the wall making sure that the large holes and the hook strip slot face to the right.

Step 7 Insert the tubes "H" and the hook strip "I" into the holes in the bracket. Use the tubes that are not swedged for the first section.

Step 8 Attach the center bracket "C" (for racks more than 36 inches) and mount to the wall. The center bracket has holes coming out of both sides of the square tubing. Be sure that the bracket is as far to the left as it can be.

Step 9 Insert the swedged tubes "J" into the holes on the right side of the center bracket. Press them in firmly all of the way, and then insert the hook strip "I" as before.

If your rack has more than two sections. Repeat steps 8 & 9 for each add-on section.

Step 10 Attach the remaining end bracket "B" and mount it to the wall.

Step 11 Add the hanger Bar "K" and "L" locking in place with the screws provided, "N".

Step 12 Press the black caps into the ends of the hanger bar.

See the 8000C Wall Mounted Coat Rack at www.Glaro.net